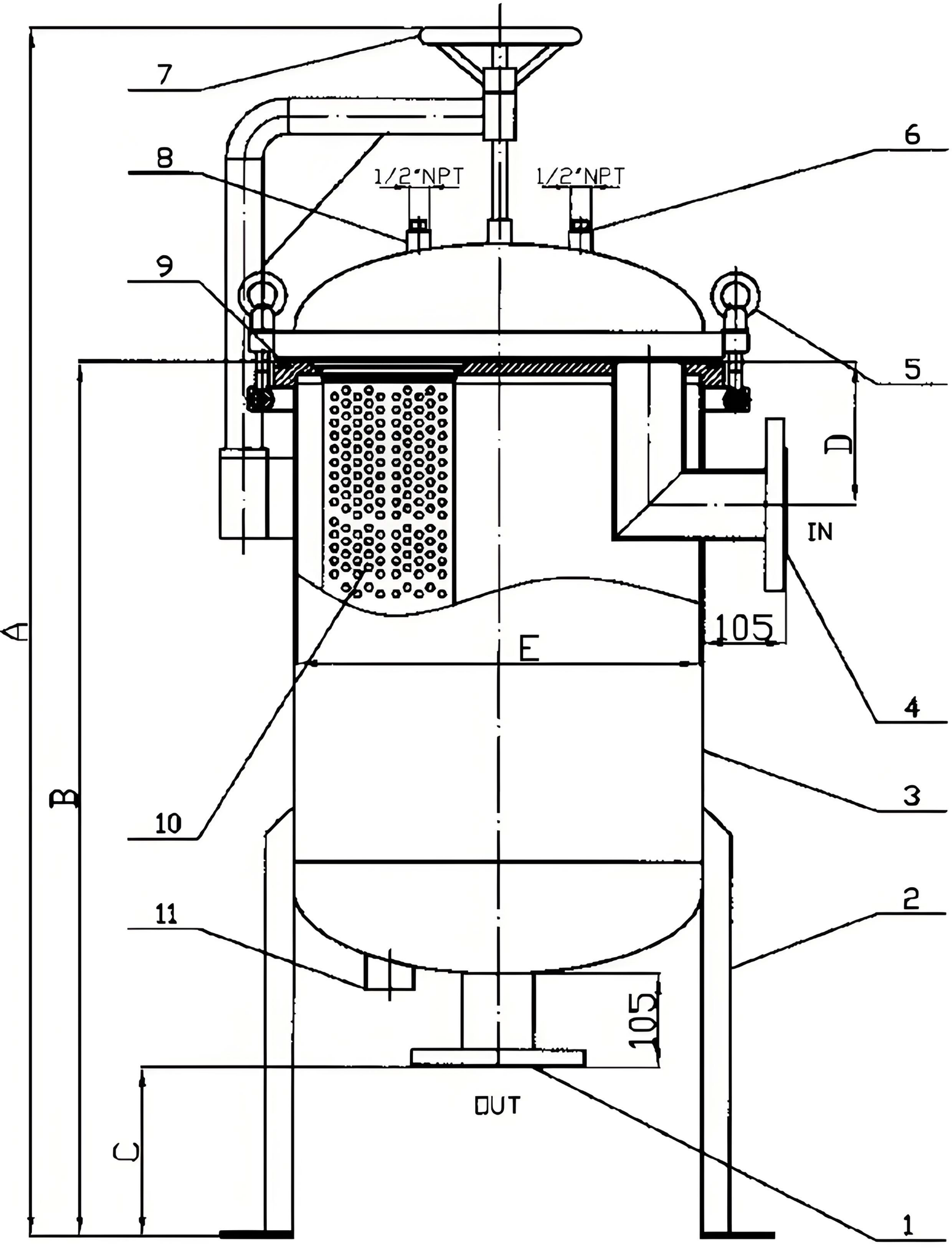

1-Outlet Flange

2-Support Frame

3-Cylinder

4-Inlet Flange

5-Quick - release Bolt Set

6-Exhaust Port

7-Handwheel

8-Pressure Gauge Port

9-Mouth - shaped Seal Ring

10-Mesh Basket

11-Drain Port